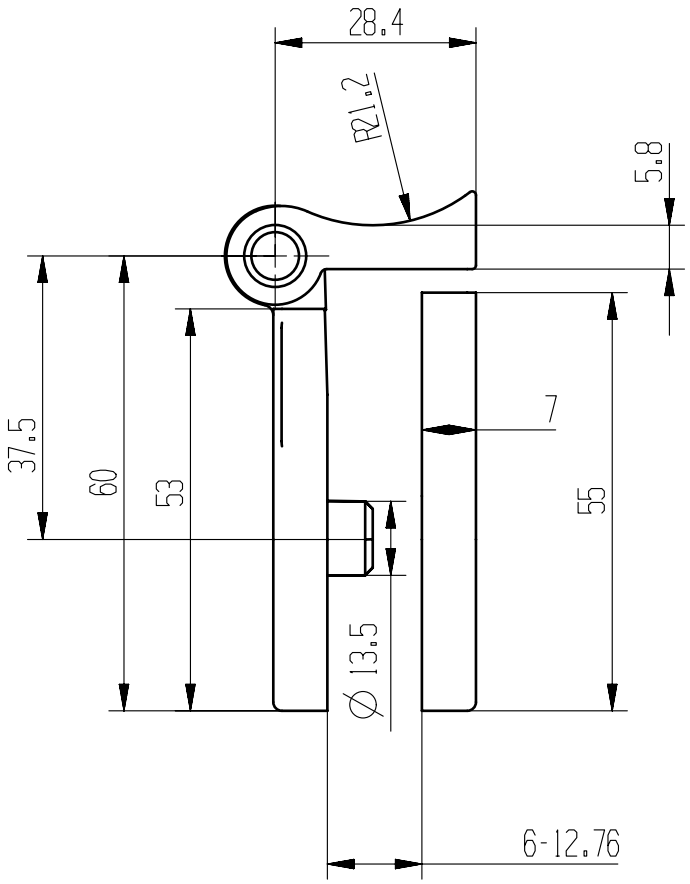
28.4
R1.2
5.8
37.5
60
53
7
55
∅13.5
6-12.76

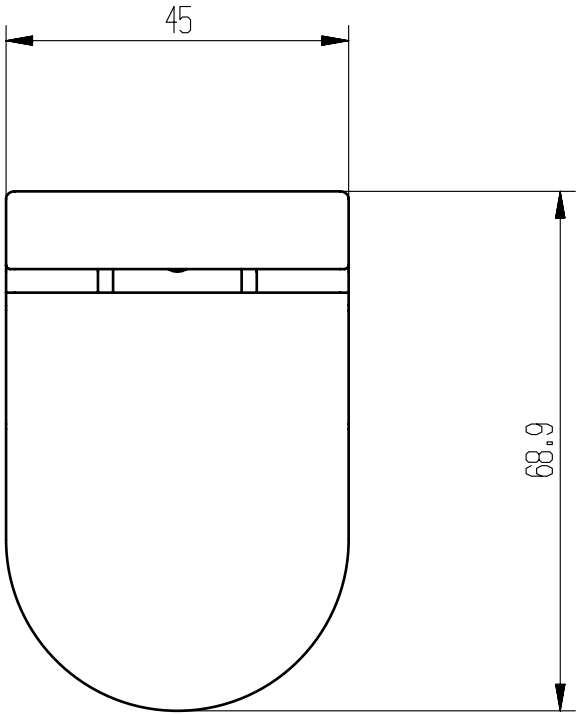
45
68.9

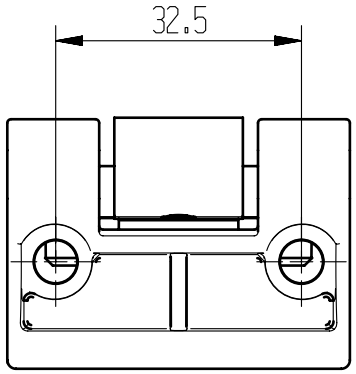
32.5

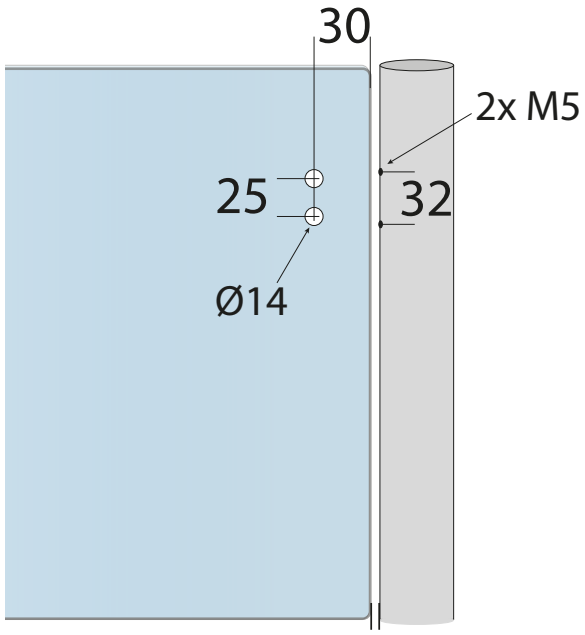
30
2x M5
25
32
Ø14